**European Journal of Applied Sciences – Vol. 9, No. 5**
**Publication Date:** October 25, 2021
**DOI**:10.14738/aivp.95.10969.
Yao, K. (2021). The Unification of Gravitational Field and Electromagnetic Field. European Journal of Applied Sciences, 9(5). 272-288.

# The Unification of Gravitational Field and Electromagnetic Field

**Kexin Yao**
Institute of Mechanical Engineering of Shaanxi Province
Room 1-7-1, Staff Building, Xi'an Metering Institution, No.12
Laodong South Road Xian, 710068 P. R. China

**ABSTRACT**

**It is pointed out that the magnetic field is not an independent real substance and it is considered that the electromagnetic field containing non-material magnetic field cannot establish a unified field theory with the gravitational field of the real substance. Through analysis, it is concluded that the so-called magnetic field is essentially a motion state of the electric field. The magnetic field is defined as the electric field contracting in motion. According to this definition, the Biot-Savart, Lorentz force, electromagnetic induction, displacement current and Ampere loop laws are deduced and proved. Through the experimental results of electrostatic field around the permanent magnet, it is proved that the magnetic field is indeed the electric field contracting in motion. It is believed that the electrostatic field is similar to the static gravitational field, the electric field contracting in motion can be defined as a magnetic field, and the gravitational field contracting in motion can also be defined as a similar contraction field, so that the electromagnetic field is completely similar to the gravitational contraction field, and the unification of the two fields is an inevitable result.**

**Keywords:** electric field, magnetic field, gravitational field, gravitational contraction field, unified field theory, special theory of relativity, fundamental laws of electromagnetics

## INTRODUCTION

An object transmits gravitational force to another object through a gravitational field; an electrified body or an object containing a current transmits electromagnetic force to another electrified body or an object containing a current through an electromagnetic field. This fact means that the field is the medium of force transmission. People are convinced that the fields in nature are unified, and that the gravitational field and electromagnetic field should have common nature and law, that is, gravitational field and electromagnetic field are unified. For the past 100 years, many people have tried to establish a unified field theory to unify the expression of the gravitational field and the electromagnetic field in unity, but they have not succeeded. As we all know, it is impossible to build a solid building without foundation. Similarly, the establishment of a unified field theory must also have a scientific and true physical foundation. That is to say, both existing gravitational and electromagnetic field theories must reflect the real feature of the field. For a hundred years, the unified field theory has not been established, which means that there must be a theory of the gravitational field and the electromagnetic field that fails to reflect the real feature of the field. Since the theory of the gravitational field is very simple and clear, it can be speculated that the electromagnetic field theory has not yet scientifically and truly reflected the essence of the electromagnetic field. Firmly believing this speculation and analyzing the electromagnetic field theory carefully, we

can find that there are indeed many defects and problems in the current electromagnetic theory. The most critical principle issues are three: 1. Electromagnetics proposes that current generates a magnetic field. Obviously, this view fails to explain with what physical action the current generates a magnetic field in space, or this view does not clarify what is the intrinsic reason for the magnetic field generated at a certain point in space. It is clearly an anti-scientific view of action at a distance that the current generates magnetic field; 2. Electromagnetics concludes that a permanent magnet is surrounded by a magnetic field which can extend to infinity. Therefore, when the magnet rotates, the further away from the center of rotation, the faster the magnetic field rotates. At a certain distance, the magnetic field can rotate faster than the velocity of light; in the infinite distance of the magnetic field, the rotation velocity can even be infinite. Such inference clearly violates the principle of constant velocity of light. Since the velocity of motion of real substance cannot be greater than the velocity of light, but the velocity of motion of a magnetic field can be greater than the velocity of light, this definitely shows that the magnetic field cannot be a real substance; 3. General laws of physics can make the necessary physical explanations, such as Archimedes' Law, Ohm's Law, and so on. However, all the laws of electromagnetics including electromagnetic induction, displacement current, Biot-Savart law, Lorentz force law, etc. are summaries of experimental results, and have not given physical explanation of the generation of these laws. It should be considered that the physical laws with unknown causes do not meet the basic requirements of scientific physics. Due to the above three principled problems, it can be judged that the electromagnetic field theory cannot truly reflect the nature of the field, which makes the unified field theory lose its reliable theoretical basis. Consequently, the failure to establish the unified field theory is inevitable. Obviously, the establishment of a unified field theory begins with the establishment of a scientifically true theory of electromagnetics, which must explain with what current generates magnetic fields; to prove that the magnetic field cannot rotate, it is necessary to clarify and deduce all the laws of electromagnetics from physics.

It can be considered that the establishment of this scientific theory of electromagnetics has laid a solid foundation for the establishment of a unified field theory. Consequently, the establishment of unified field theory is inevitable.

## THE MAGNETIC FIELD IS AN ELECTRIC FIELD CONTRACTING IN MOTION

### Magnetic field is not real substance

There is an electrified body on the train moving at velocity V. The observer on the train concludes that there is only an electrostatic field around this electrified body; but the observer on the ground sees that this electrified body is moving at velocity V along with the train. He believes that the moving electrified body is a current, and the current will inevitably generate a magnetic field. Therefore, he concludes that in addition to the electrostatic field around this moving electrified body, there must also be a magnetic field. If the magnetic induction intensity at point K near the electrified body is B, then the observer moving at a velocity of 2V will think that the electrified body moves at -V and the magnetic induction intensity at point K must be -B. Obviously, all observers with different velocities of motion necessarily think that the magnetic induction intensity B at point K is completely different.

It is well known that the existence of real substance has nothing to do with the motion state of the observer, which is the fundamental attribute of real substance. However, the existence and

size of the above magnetic field are closely related to the observer, which means that the magnetic field does not conform to the basic characteristics of real substance. This also means that the magnetic field is not a real substance. As mentioned above section of Introduction, the velocity of motion of the magnetic field can be infinite, which further proves that the magnetic field cannot be a real substance.

**The magnetic field is an electric field being in motion**

Magnetic field is not only widely used in physics, but also has important application value in many science majors, so it is necessary to retain the concept of magnetic field. However, to retain the concept of magnetic field, it is necessary to retain the basic framework that the current generates magnetic field. How to abandon the non-material components of the magnetic field and give new practical meaning to magnetic field science while retaining this basic framework?

Current is the motion of an electrified body. There is an electric field around the electrified body. The motion of the electrified body will inevitably drive the electric field around it to move together. Therefore, if we assume that the motion of electric field around the electrified body generates a magnetic field, we can retain the basic framework that the current generates magnetic field while give a new meaning to the magnetic field science. So, the electric field in motion is the magnetic field. What is the fundamental difference against the magnetic field generated by current?

1. As mentioned above, the view that current generates a magnetic field cannot explain the physical cause of magnetic field generation thus is an anti-scientific view of action at a distance; the electric field in motion is the magnetic field, that is, there is a macroscopic electron motion in the current-carrying wire, the electron motion will inevitably drive the common motion of the electric field around it. The electric field of this motion is the magnetic field, which explains the physical cause of magnetic field generation.
2. The view that the current generates magnetic field regards the magnetic field as an independent real substance, so different observers have fundamentally different views on the size and direction of the magnetic field. This absurd view violates the basic attribute that the existence of real substance is independent of the observer. The view that the electric field in motion is the magnetic field means that the magnetic field is a physical quantity that expresses the motion of the electric field. That is to say, the magnetic field considered by observers with different motions is only the different motions of the real substance electric field, just as different observers see motions of a train differently. This does not violate the basic attribute of real substance.
3. The view that current generates magnetic field regards the magnetic field as a real substance. Therefore, there is a misjudgment that the velocity of motion of the magnetic field far away from the magnet can be faster than the velocity of light when the magnet rotates. The view that the magnetic field is the electric field in motion can eliminate this defect. This is because the electric field around the electron does not rotate when the electron rotates, which means that the electric field only moves and does not rotate, that is, there is no rotating electric field, so there is no rotating magnetic field.
4. All the laws accompanying the view that current generates magnetic field cannot make the necessary physical explanation. Meanwhile, the view the magnetic field is the electric

field in motion can make a scientific physical explanation of all the fundamental laws of electromagnetics and can be deduced and proved mathematically.

**The formula for calculating magnetic field**

According to the experimental results published by electromagnetics, the magnetic induction intensity B is proportional to the current, and the current is the product of the electric quantity Q of the electrified body and its velocity of motion V. Since the electric field intensity E of the electric field generated by the electrified body is proportional to the electric quantity Q, B must be proportional to the product of $\mathbf{V}\bullet\mathbf{E}$. It can also be seen from the experimental results that B is perpendicular to V and E. Therefore, we can determine that the calculation formula of the magnetic induction intensity B should be $\mathbf{B}=\mathrm{P}\mathbf{V}\times\mathbf{E}$, where P is a proportional constant, and the data in electromagnetics can be used to determine $\mathrm{P}=\varepsilon_0\mu_0=1/\mathrm{C}^2$. From this, the calculation formula of the magnetic induction intensity can be obtained:

$$\mathbf{B}=\varepsilon_0\mu_0\mathbf{V}\times\mathbf{E}=\frac{1}{\mathrm{C}^2}\mathbf{V}\times\mathbf{E} \quad (1)$$

**Deduction and proving of Biot-Savart law**

In order to comply with the provisions of the law, the following deduction is on the basis that the current is the flow of positron.

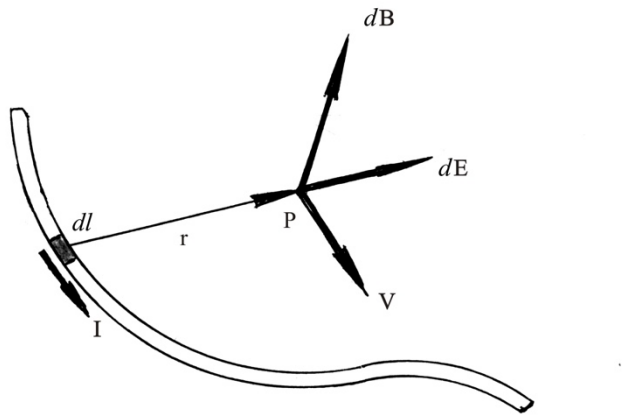


**Figure 1 Magnetic field of current element** $Idl$

Figure 1. Set the line charge density of the positron per unit length of the wire as $\tau$, then the electric quantity in the $d\boldsymbol{l}$ segment of the wire is $\mathrm{d}Q=\tau\mathrm{d}l$, according to Coulomb's law, the electric field intensity of $\mathrm{d}Q$ at point P in the figure should be:

$$d\mathbf{E}=\frac{1}{4\pi\varepsilon_0}\frac{dQ}{r^2}\mathbf{r}_0=\frac{\tau dl}{4\pi\varepsilon_0 r^2}\mathbf{r}_0 \quad \text{(Unit vector in } r_0\text{-r direction)}$$

V represents the velocity of motion of positrons, and then, according to the formula (1), magnetic induction intensity at point P

$$d\boldsymbol{B} = \mu_0\varepsilon_0\boldsymbol{V}\times d\boldsymbol{E}=\varepsilon_0\mu_0\boldsymbol{V}\times\frac{\tau dl}{4\pi\varepsilon_0 r^2}\boldsymbol{r}_0$$
$$= \mu_0\frac{\tau dl}{4\pi r^2}\boldsymbol{V}\times\boldsymbol{r}_0$$

Substitute $\boldsymbol{V}=\boldsymbol{I}/\tau$ into the above formula to obtain $d\boldsymbol{B}=\frac{\mu_0 dl}{4\pi r^2}\boldsymbol{I}\times\boldsymbol{r}_0$

Obviously, this formula is the Biot-Savart law

**The electric field contracts in length in the direction of motion**

It is pointed out according to the special theory of relativity that, when an object moves at a velocity V, the length of the object $l_0$ in the V direction will contract as $l=l_0\sqrt{1-V^2/C^2}$ Since the electric field is a real substance, the electric field necessarily contracts in length in the direction of motion. Under the condition of a constant electricity amount, the density of the electric field is inversely proportional to the length while the electric field intensity is proportional to the density, that is, inversely proportional to the length. It can be seen that when the electric field is stationary, the field intensity at a certain point is E, then when the electric field moves at a velocity V, the field intensity E at a certain point necessarily increases as:

$$E'=E\Big/\sqrt{1-V^2/C^2} \qquad (2)$$

If the distance between any two lines is $d_0$, the angle between the E line and the horizontal line is $\theta$, and the distance between the intersection points of the two E lines and the horizontal line is $d$, then $d_0=d\cdot\sin\theta$ If the electric field is moving in a horizontal direction with a velocity V, then will contract as $d'=d\Big/\sqrt{1-V^2/C^2}$
according to formula (2), then,

$$d_0'=d'\sin\theta=d\sin\theta\Big/\sqrt{1-V^2/C^2}=d_0\Big/\sqrt{1-V^2/C^2}$$

This calculation formula shows that the contraction of $\theta$ is only related to the velocity V, and is not related to the angle $\theta$ between E and V. That is to say, when the electric field moves at a velocity V, regardless of the motion direction of the electric field:

$$E'=E\Big/\sqrt{1-V^2/C^2}$$

The E of the electric field in motion must contract to $E'$, so E in formula (1) should be represented by $E'$, but all the velocity of motion V of the electrons in the current is much smaller than the velocity of light C, can be regarded as equal to 1, that is, it is believed that $\sqrt{1-V^2/C^2}$, namely the formula (1) of Biot-Savart law still holds.

$$E'=E$$

**The electric energy of an electric field in motion**

In a static space, it is assumed that the electric field energy per unit volume of electrons in space can be expressed as positive energy $\omega_+=\varepsilon_0 E^2/2$, the electric field energy per unit volume of positrons

$$\omega_-=-\varepsilon_0 E^2/2$$

$$\omega=\omega_+ +\omega_-=0$$

in the space must be as the whole space does not show energy, the total energy per unit volume of space is . If all electrons in space move at velocity V, then according to formula (2), the field intensity E of the electron will increase to . The electric field energy per unit volume of the electron will increase to

$$\omega'_{+}=\varepsilon_0 E'^2/2=\varepsilon_0 E'^2/2\left(1-V^2/C^2\right)$$

Since can be expanded by series as . And the velocity of motion of the general electric field is much less than the velocity of light C, therefore, the expansion can ignore and subsequent items, so that the above formula can be written as:

From the formula (1), we can obtain , namely , and we can further obtain , the above formula can be written as

Since , so

$$\omega'_{+}\equiv\omega_{+}+\frac{\varepsilon_0 E^2\left(\frac{\mu_0\varepsilon_0 VV}{2C^2}\right)}{2}\equiv\omega_{+}+\frac{\varepsilon_0\mu_0 B^2V^2}{2\mu_0^2}$$

$$\omega'_{+}=\omega_{+}+\frac{\mu_0 H^2}{2}$$

$$\omega=\omega'_{+}+\omega_{-}=\left(\omega_{+}+\omega_{-}\right)+\frac{\mu_0 H^2}{2}=\frac{\mu_0 H^2}{2}$$

The total energy of space (3)

Formula (3) shows that when there is macroscopic electron motion in a substance, the energy per unit volume of the substance is . This is the energy that the contracting in motion of the electric field the electron increases. It can be seen that this energy is the magnetic field energy called by electromagnetics, which also means that the so-called magnetic field energy is the kinetic energy of the electric field in motion.

## DEDUCTION OF THE FUNDAMENTAL LAWS OF ELECTROMAGNETICS

The above section 2.4 deduces the Biot-Savart law, and then makes a brief deduction and analysis of the other fundamental laws.

### Deduction and analysis of Lorentz force

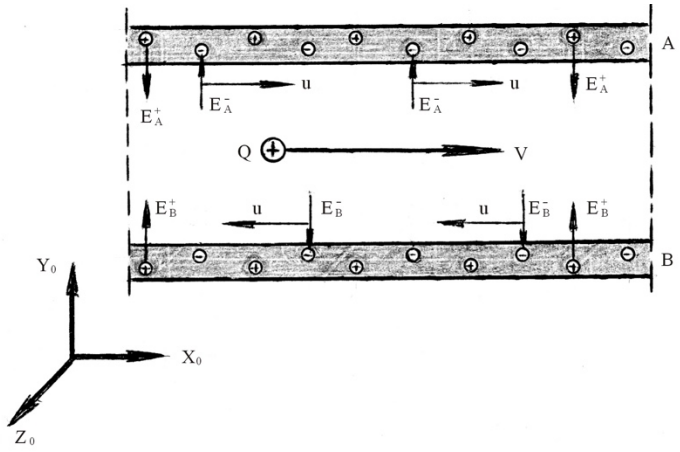


Figure 2. Source analysis of Lorentz force

In Figure 2, A and B represent the cross section of the current plane composed of two "infinite" current-carrying wires. The two current planes of A and B are composed of common current-carrying wires with the same current and opposite directions. In the figure, and respectively represent the electric field intensity generated by the moving negatrons in the two current planes; and respectively represent the electric field intensity generated by the stationary positron with equal electric quantity of the negative electron, obviously.

.

First obtain the magnetic induction intensity between the two current planes of A and B. From the formula (1) , we can see that B comes from the electric field in motion, and are not related to B when not moving, we only analyze the electric field moving at velocity and the electric field moving at velocity .

The magnetic induction intensity generated by , from the formula (1)

( is the unit vector in the Z direction)

The magnetic induction intensity generated by , from the formula (1)

( is the scalar of and )

The total magnetic induction intensity generated by the two current planes of A and B

$$\boldsymbol{B} = \boldsymbol{B}_A + \boldsymbol{B}_B = 2\mu_0\varepsilon_0 uE\boldsymbol{Z}_0$$

As shown in Figure 2, the positively charged particle Q moves parallel to A and B at a velocity V. According to the electromagnetic Lorentz force formula, the Lorentz force experienced by Q should be:

( is the unit vector in the Y direction) (4)

This formula (4) is the Lorentz force formula expressed by in the case of Figure 2.

The Lorentz force is an empirical formula summarized by experimental results. It does not clarify the physical cause of Lorentz force. Next, we apply the principle that the magnetic field is the electric field contracting in motion to deduce the source of Lorentz force from physics.

The force of Q must come from the electric field, that is to say, the Lorentz force must still be the electric field force, so we have to analyze why the Q in motion experiences the existence of the electric field.

In Figure 2, there are four electric fields , , , between the two current planes of A and B. Because the force of and on Q is always equal and opposite in direction, and the forces cancel each other out, so the forces of and on Q can be ruled out. In this way, the force experienced by Q namely the electric field experienced by Q can only come from and . E represents the scalar of and , so we obtain.

It can be seen from the figure that the relative velocity of and Q, the relative velocity of and Q, according to formula (2) , the electric field experienced by Q on the two planes of A and B is

Since $1/\sqrt{1-X^2/C^2}$ can be expanded to $1+X^2/2C^2+3X^4/8C^4+5X^6/16C^6+$ by series; when x is very small relative to C, and subsequent items can be ignored, so we obtain $1/\sqrt{1-(V-u)^2/2C^2}=1+X^2/2C^2$. Therefore, $\boldsymbol{E}_A'$ and $\boldsymbol{E}_B'$ can be written as

$$\boldsymbol{E}_A' = E\left[1+(V-u)^2/2C^2\right](-\boldsymbol{Y}_0) \qquad \boldsymbol{E}_B' = E\left[1+(V+u)^2/2C^2\right](-\boldsymbol{Y}_0)$$

The combined electric field experienced by Q is

$$\boldsymbol{E}_Q = \boldsymbol{E}_A' + \boldsymbol{E}_B' = E\left[(V+u)^2/2C^2-(V-u)^2/2C^2\right](-\boldsymbol{Y}_0)$$
$$= E\frac{2Vu}{C^2}(-\boldsymbol{Y}_0) = 2E\varepsilon_0\mu_0 Vu(-\boldsymbol{Y}_0) \qquad \varepsilon_0\mu_0 = 1/C^2$$

It is previously proved $\boldsymbol{B}=2\mu_0'\varepsilon_0 uE\boldsymbol{Z}_0$ is in $\boldsymbol{V}\times\boldsymbol{B}$ direction, there is $-\boldsymbol{Y}_0$

$$\boldsymbol{F} = \boldsymbol{E}_Q Q = Q2\mu_0\varepsilon_0 EVu(-\boldsymbol{Y}_0) = Q\boldsymbol{V}\times\boldsymbol{B} \tag{5}$$

Obviously, this F is the Lorentz force

**Deduction and analysis of electromagnetic induction law**

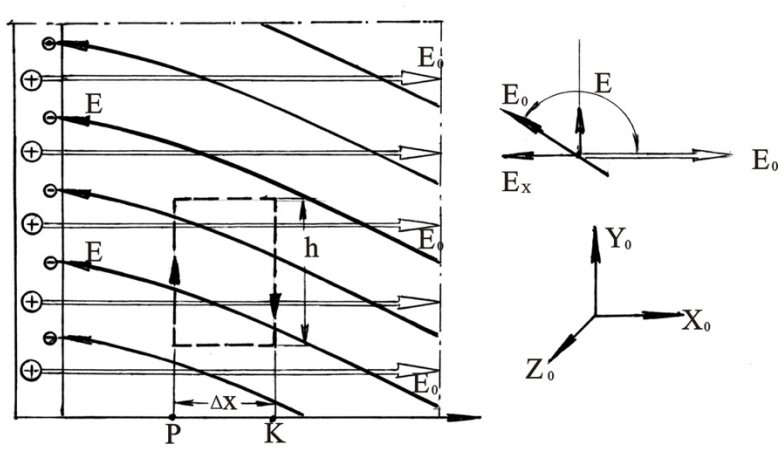


(a) (b)

Figure 3 The variable velocity motion of electrons travels at the velocity of light.

Figure 3 (a) shows a section of the cross-section of an infinite plate conductor, in which evenly distributed free electrons performs motion with variable velocity of Y=f (t) along Y direction. The electric field generated by electron must be accompanied by the same variable motion of the electron. Since the electric field is a real substance, the motion of the electric field must propagate at a certain velocity like water and air. If the propagation velocity of the electronic variable motion in its electric field is the velocity of light C, then there is , the motion of electrons propagates at a limited velocity C, which inevitably leads to the distortion of the power line (line E) of the electrons. Set at P, the intersection angle of the electron E line and the positron $E_0$ line is $\alpha$. Since the positive and negative electrons have $E_x=-E_0$ the same amount of electricity, the electric field is not displayed in the x direction, so there must be , see the Figure (b) above, and $tg\alpha = E_y/E_x$ there is

$$E_y = E_x tg\alpha = -E_0 tg\alpha \tag{6}$$

$$tg\alpha = dy/dx = df(t)/dx = dy/dt \qquad E_y = -E_0 df(t)/dx$$

The velocity of electron in Y direction is $u = dy/dt = df(t)/dt$

We obtain the potential of closed loop abcd as shown in figure (a), so that $E_{y1}$ and $E_{y2}$ represent the field intensities of P and K in the Y direction respectively, so there is

$$\oint_l Edl = \int_a^b E_{y2}dy + \int_b^c (E_x - E_0)dx + \int_c^d E_{y1}dy + \int_d^a (-E_x + E_0)dx$$

Since $E_x$ and $E_0$ are equal and opposite in directions in the x direction, the 2nd and 4th integrals can be eliminated

$$\oint_l Edl = \int_a^b E_{y2}dy + \int^d E_{y1}dy = -E_{y2}h + E_{y1}h \qquad (ab = -h)$$

Substitute $E_{y1} = -E_0 df(t)/dx$ and $E_{y2} = -E_0 df(t - \Delta x/C)/dx$ into the above formula to obtain

$$\oint_l Edl = E_0 hdf(t - \Delta x/t)/dx - E_0 hdf(t)/dx = E_0 h \frac{d}{dx}[f(t - \Delta x/C) - f(t)]$$

Since the velocity of motion V of electrons is extremely small relative to the velocity of light C, the E line in $\Delta x$ can be regarded as a straight line, so there must be $f(t)=f(t - \Delta x/C)+ tg\alpha$

$$\oint_l Edl = E_0 h \frac{d}{dx}[-\Delta x tg\alpha]$$

$\Delta x$ $\Delta x$

$$tg\alpha = dy/dx = \frac{dy}{dt} \bullet \frac{dt}{dx} = u/c$$

$$\oint_l Edl = \frac{-E_0 h\Delta x}{C} \bullet \frac{du}{dx} = -\frac{E_0 h\Delta x}{C} \bullet \frac{du}{dt} \bullet \frac{dt}{dx} = -\frac{E_0 h\Delta x}{C^2} \bullet \frac{du}{dt}$$

is the area S of the abcd box, and the magnetic induction intensity of E in the motion of $h\Delta x$ in S is calculated by formula (1)

In the above formula, since $u$ is $u \perp E_0$, so there is $B = u \times E/C^2$ $B = E_0 u/C^2$

$$\oint_l Edl = -S\frac{d}{dt}\frac{E_0 u}{C^2} = -\frac{d}{dt}SB = -d\phi/dt \qquad (7)$$

Obviously, formula (7) is the expression of electromagnetic induction law

Next, we take the common current-carrying coil as an example to clarify the source of the electromagnetic induction law from physics. To facilitate explanation, we must first determine the relationship between the component $E_y$ of the variable motion electric field in the Y direction and the velocity $u$, according to the previous formula (6), there is $E_y = -E_0 tg\alpha = -E_0 \frac{dy}{dx} = -E_0 \frac{dy}{dt} \bullet \frac{dt}{dx}$.

Since, the velocity of motion of the electric field in the Y direction is $u = dy/dt$, the velocity of light is $C = dx/dt$, as mentioned earlier. Therefore, $E_x = -E_0$ So there is $E_y = -E_0 u/c$ $E_y = E_x u/c$ (8)

$$\frac{dE_y}{dt} = \frac{E_x}{C} \bullet \frac{du}{dt} = \frac{E_x}{C} a$$

In the formula, a represents the acceleration. Since the diameter of the coil is much smaller than the velocity of light, the time for the electric wave to travel from left to right is extremely short. A can be regarded as a constant, therefore, the ratio of $E_y$ to $t$ in formula (8) is also a constant, that is, formula (8) is a linear formula. In combination with $t=x/C$, formula (8) can be written as

$$E_y = \frac{E_x}{C} at = \frac{E_x}{C^2} ax \qquad (9)$$

Formula (9) shows that $E_y$ and x are in a straight line relationship.

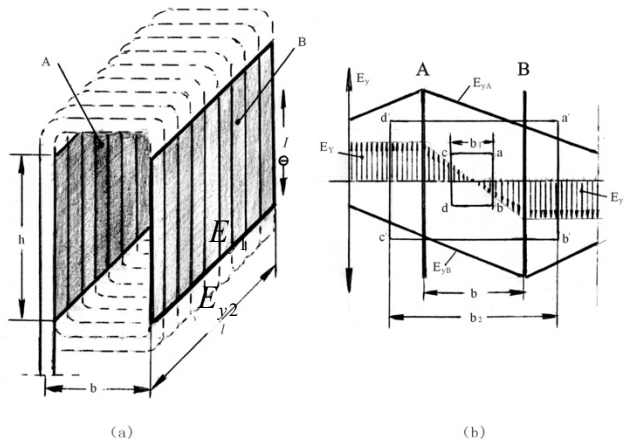


Figure 4. The electric field distribution inside and outside the coil when the current changes

Figure 4 (a) shows a rectangular current-carrying coil. We regard the left and right sides of the coil as a current panel. The coil has $n$ turns of wire, so the total current intensity of the two panels A and B is $nI$. It can be considered that the A and B panels are similar to the panel of Figure 3, when the current of coil changes, the negative electrons on the A and B panels will inevitably perform variable motion. The variable motion of the negative electron will inevitably generate an electric field which propagates at the velocity of light according to the law of the negative electron motion. The component $E_{y1}$ of the electric field propagating in the Y direction of the plate A and the component $E_{y2}$ of the electric field propagating in the Y direction of the plate B are both proportional to a and there is the linear relationship with the distance X. Set a as a negative value and the initial field intensity of A panel is $E_{y1}^0$. According to formula (9), we obtain $a'b'$, $c'd'$, from which line can be drawn as the straight line on figure (b). In the same way, the line of B panel can be drawn as the straight line below (b), and the synthetic field intensity with is as shown in the shadow of figure (b). It can be seen that the potential of the abcd loop in the middle of A and B panels (inside the coil) is only proportional to the width $b$ of the loop, that is, proportional to the loop area or the magnetic flux surrounded by the loop; the potential of the loop outside A and B panels (outside the coil) is only proportional to the distance $b_1$ between A and B, and is independent of the width $b$ of loop, that is, independent of the area of loop. This explains why the potential of any closed loop of different size outside the coil is only proportional to the rate of change of the magnetic flux surrounded by the coil.

**Deduction and proving of displacement current**

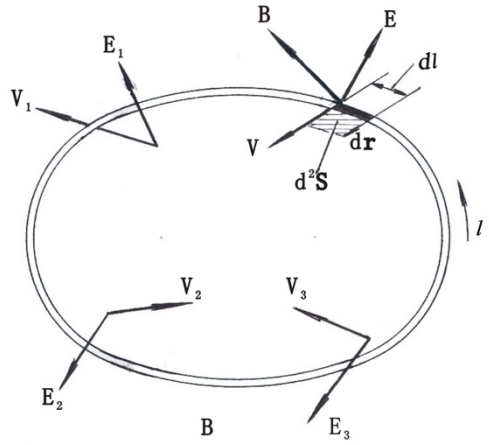


Figure 5. The electric field in motion passes through the $l$ loop to generate $d\phi/dt$

In Figure 5, $l$ represents a closed arbitrary loop, the winding direction of which is anticlockwise, and there are electric fields , , ... formed by a lot of electron motion around this circuit, which are different in size and direction. We analyze the motion of the electric field in the $dl$ segment shown in the Figure. $\boldsymbol{E}_1\boldsymbol{V}_1$ $\boldsymbol{E}_2\boldsymbol{V}_2$ $\boldsymbol{E}_3\boldsymbol{V}_3$

The direction of the electric field is defined as positive E, and positive E passes through the right end of $\boldsymbol{dl}$ through the left end as a positive pass, because such a pass will increase the number of positive electric fields in the $l$ loop; if -E passes from the left end of $\boldsymbol{dl}$ to the right end, it is also positive pass, because such a pass will reduce the number of negative electric fields in the $l$ loop. Contrary to the above two cases, it is negative pass.

Figure 5 shows that E moves forward by $\boldsymbol{dr}$ distance through $\boldsymbol{dl}$ at a velocity V in $dt$ time, $\boldsymbol{dl}$ and $\boldsymbol{dr}$ (r and V are in the same direction) each form a tiny area $d^2\boldsymbol{S}=\boldsymbol{dl}\times\boldsymbol{dr}$ for the side length, because $\boldsymbol{dl}$ and $\boldsymbol{dr}$ are both infinitesimal, so the product of the two should be a second-order infinitesimal, and $d^2\boldsymbol{S}=\boldsymbol{dl}\times\boldsymbol{dr}$ represents this tiny area. According to the formula (1), E generates $\boldsymbol{B}=\mu_0\varepsilon_0\boldsymbol{V}\times\boldsymbol{E}$ with V motion. Because $\boldsymbol{B}=\mu_0\boldsymbol{H}$, this formula can also be written as $\boldsymbol{H}=\varepsilon_0\boldsymbol{V}\times\boldsymbol{E}=\boldsymbol{V}\times\boldsymbol{D}$ (In the formula, $\boldsymbol{D}=\varepsilon_0\boldsymbol{E}$).

The magnetic potential generated by H on $\boldsymbol{dl}$ should be $\boldsymbol{H}\bullet\boldsymbol{dl}=(\boldsymbol{V}\times\boldsymbol{D})\bullet\boldsymbol{dl}$, according to the vector formula, we obtain

$$(\boldsymbol{V}\times\boldsymbol{D})\bullet\boldsymbol{dl}=(\boldsymbol{dl}\times\boldsymbol{V})\bullet\boldsymbol{D}$$

Since $\boldsymbol{V}=d\boldsymbol{r}/dt$, the formula can be written as:

$$\boldsymbol{H}\bullet\boldsymbol{dl}=\left(\boldsymbol{dl}\times\frac{d\boldsymbol{r}}{dt}\right)\bullet\boldsymbol{D}=\frac{1}{dt}(\boldsymbol{dl}\times\boldsymbol{dr})\bullet\boldsymbol{D}=\frac{1}{dt}d^2\boldsymbol{S}\bullet\boldsymbol{D}$$

In the above formula, $d^2\boldsymbol{S}\bullet\boldsymbol{D}$ is the electric displacement flux of D in the micro area of $d^2\boldsymbol{S}$, which can be expressed by $d^2\phi_D$, so the above formula can be converted to , so

$$\boldsymbol{H}\bullet d\boldsymbol{l} = d\phi_D/dt \qquad \oint \boldsymbol{H}\bullet d\boldsymbol{l} = \int_s d^2\phi_D/dt = d\phi_D/dt \quad (10)$$

Obviously, formula (10) is the expression of displacement current

**Deduction of Ampere's Loop Law**

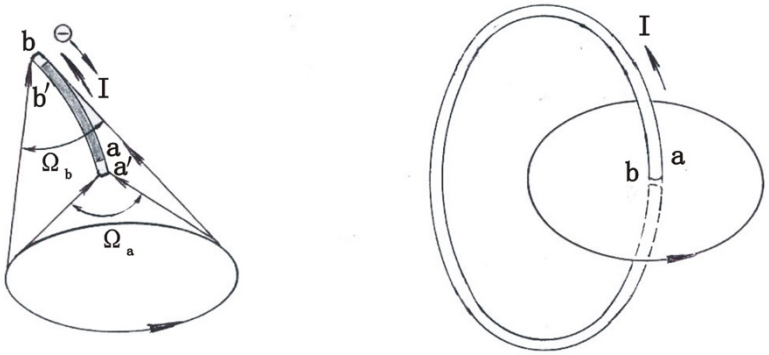


$(a)$ $(b)$

Figure 6 Deduction of Ampere's Loop Law

Figure 6(a) ab is a section of current-carrying wire, the direction of current I is from down to up, while the actual direction of free electrons in the wire is from up to down. The winding direction of loop $l$ is the right-hand spiral direction of I. At $dt$ time, negative electron beam moves to $b'a'$ from $ba$. The overlap part between negative electron beam $b'a'$ and $ba$ is $b'a$ (the thick black line in the Figure). Obviously, during $dt$ time, the overlapping negative electron beams $b'a$ have the same electric displacement flux to the $l$ loop, and it has nothing to do with the change of the electric displacement flux in the loop. Therefore, during $dt$ time, what causes the change of electric displacement flux in the $l$ loop is that the $b'a$ segment is less $bb'$ segment than $ba$, but more $aa'$ than $ba$ segment. According to the fact that the matter is not destroyed, the electric quantity of $bb'$ and $aa'$ is the same, and this electric quantity is set as $-dQ$. Obviously, during $dt$ time, the negative electron beam of $ba$ becomes the negative electron beam of $b'a'$. For the $l$ loop, $-dQ$ $bb'$ becomes $-dQ$ of $aa'$. According to Coulomb's law, the electric displacement flux $d\phi_D$ of point charge $dQ$ to a certain loop is directly proportional to the solid angle $\Omega$ of this loop against $dQ$, and the relation is $d\phi_D = \Omega dQ/4\pi$ (the solid angle of the whole closed plane is equal to $4\pi$). Set the solid angle of $-dQ$ in $aa'$ segment against $l$ is $\Omega_a$, and the solid angle of $-dQ$ in $bb'$ segment against $l$ is $\Omega_b$, the potential generated by $-dQ$ in $aa'$ and $bb''$ segment are all positive in the upward direction.

Therefore, during $dt$ time, the change of the total electrical displacement flux of the $l$ loop is

$$d\phi_D = d\phi_{aa'} - d\phi_{bb'} = \frac{dQ}{4\pi}(\Omega_a - \Omega_b)$$

The above formula can be changed to $$\frac{d\phi_D}{dt} = \frac{dQ}{dt}\frac{(\Omega_a - \Omega_b)}{4\pi} = I(\frac{\Omega_a - \Omega_b}{4\pi})$$

The magnetic potential of this current-carrying wire $ab$ to the $l$ loop should be

$$\oint H \cdot dl = \frac{d\varphi_D}{dt} = \frac{(\Omega_a - \Omega_b)}{4\pi} I$$

Figure 6 (b) shows that a closed wire with current I passes through the $l$ loop. We can regard this closed wire as that the wire is composed of point a on the plane of the $l$ loop to point b on the plane of the $l$ loop. The solid angle point a against $l$ is $\Omega_b = -2\pi$, and the solid angle of point b against $l$ is $\Omega_a = 2\pi$, therefore, according to the above formula, the magnetic potential generated by the closed wire to the $l$ loop should be

$$\oint H \cdot dl = \frac{(\Omega_a - \Omega_b)}{4\pi} I = \frac{2\pi - (-2\pi)}{4\pi} I = I \qquad (11)$$

Obviously, formula (11) is the expression of the law of the Ampere's Loop Law.

## THE EXPERIMENTAL PROOFING OF THAT MAGNETIC FIELD IS AN ELECTRIC FIELD CONTRACTING IN MOTION

According to Coulomb's law and Gauss' theorem, there can be no electric field around the non-electrified body, but the facts negate this conclusion. Experiments show that a cubic uncharged NdFeB permanent magnet with a side length of 20mm and a plane magnetic induction intensity of about 0.8T has a negative electrostatic field with a field intensity of about 240V/m and 130V/m respectively at 10mm and 20mm above the edges of its N and S planes. In addition, at 10mm and 20mm beside the four edges on its side, there are positive electrostatic fields with field intensity of about 200V/m and 100V/m respectively. This fact shows that there is a clear electrostatic field around uncharged NdFeB permanent magnets, and it also proves that Coulomb's law and Gauss's theorem are not valid for permanent magnets. However, this fact just proves that the view that magnetic field is an electric field contracting in motion is true and correct, as explained below

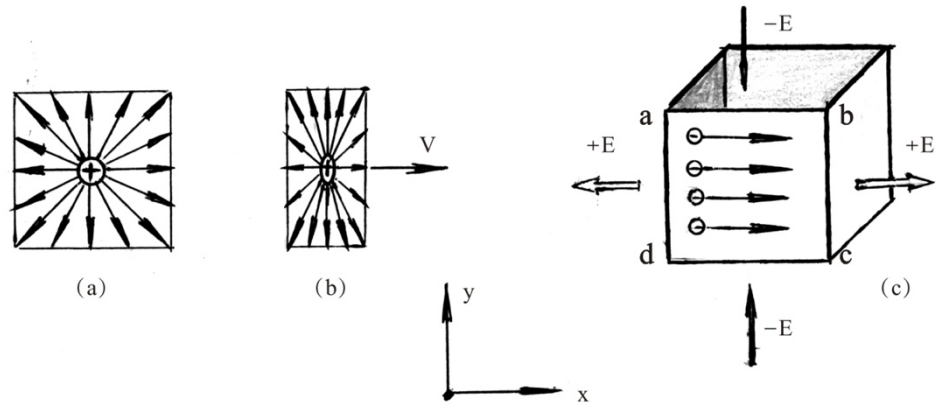


Figure 7 (a) shows that the electric field is evenly distributed when the charge is stationary, and Figure (b) shows the contraction of the electric field when the electric charge and electric field

are moving at high velocity in the X direction at $\sqrt{3}/2 \bullet C$. It can be seen that, after the high-velocity motion of the electric charge, the line of electric force is densely concentrated in the Y direction, that is, the electric field intensity in the Y direction is increased, while the line of electric force is sparsely dispersed in the X direction, that is, the electric field intensity in the X direction is decreased. (C) graph is a rectangular tubular current-carrying coil. One of the abcd planes of this coil is analyzed separately, on which all the electrons will move in the x direction. As shown in Figure (b), the electric field generated by the electrons is densely concentrated in the Y direction, that is, the electric field intensity is increased, while the electric field is sparsely dispersed in the X direction, that is, the electric field intensity is decreased. Therefore, the negative electric field intensity in the Y direction will inevitably be greater than the intensity of positive electric field generated by the proton with the same electric quantity with the electron, so that the resultant result is bound to present a negative electrostatic field. However, since the intensity of negative electric field generated by the electrons is decreased, the negative electric field intensity in the X direction will inevitably be smaller than the intensity of positive electric field generated by the proton with the same electric quantity with the electron, so that the resultant result is bound to present a positive electrostatic field. Since the magnetic field of the rectangular permanent magnet is similar to the magnetic field of the rectangular tube current-carrying coil of the same shape, the electrostatic field analyzed in the above (C) diagram is basically similar to the electrostatic field around the tested NdFeB permanent magnet. This qualitatively explains why there are both negative and positive electrostatic fields around the NdFeB permanent magnet.

It should be noted that the permanent magnet and the current-carrying coil are very different, that is, the free electricity in the coil move linearly; while the electrons in the magnetic domain of the permanent magnet rotate, and the direction of the electron's motion is constantly changed. The contraction of the electric field in the linear motion of electrons is very different from the contraction of the electric field in the rotational motion of electrons. Therefore, the specific values of the negative and positive electric field intensities around the permanent magnet must be deduced and calculated based on the rotation of the electrons. The specific calculation process is lengthy, and will not be described here, please refer to references 2 and 3.

As previously mentioned in 3.1, the Law of Lorentz force was deduced and proved under the condition of uniform magnetic field. It can be seen that under the condition of non-uniform magnetic field, it is impossible to deduct the Law of Lorentz force by applying the principle that the magnetic field is an electric field contracting in motion. Therefore, under the condition of non-uniform magnetic field, the Law of Lorentz force does not hold. For example, when analyzing the interaction force between any two charges, with the application of the Law of Lorentz force, it is inevitable to obtain that the interaction force of the two charges is not the same and the direction is not opposite, that is, it does not meet the law of reaction force. Especially, the analysis of interaction force between a rectangular current-carrying coil and charged particles moving outside the circle can even get the absurd conclusion that the direction of the acting force and the reaction force can be the same. Obviously, for the non-uniform magnetic field, the law of Lorentz force cannot be applied to analyze the force on the charged particles. However, the application of the principle that the magnetic field is an electric

field contracting in motion can obtain the correct conclusion that conforms to the law of reaction. The reason is simple. For any two charged particles in motion, the relative velocity of the two is always equal and opposite in direction, and the contraction of the electric field is exactly the same. Therefore, the interaction force of the two must be equal and opposite in direction, always consistent with the law of reaction force. The interaction force between the collection of charged particles is a collection of the interaction force of single charged particles, which naturally conforms to the law of reaction force.

The previous description shows that the application of the view that the magnetic field is an electric field contracting in motion deducted and proved the fundamental law of electromagnetics, and also eliminates some defects and existing problems of electromagnetics. Therefore, it can be concluded that the view that the magnetic field is an electric field contracting in motion is objective and true.

## THE UNIFICATION OF GRAVITATIONAL FIELD AND ELECTRIC FIELD

The expression of Coulomb's law is known as

$$F = K\frac{Q_1 \bullet Q_2}{r^2} \qquad (12)$$

In the formula, Q and Q2 represent the electric quantity of two charges, $K$ represents the distance between the charges, and $r$ is a proportional constant. From the formula (12), the expression of the electric field intensity of the charge is

$$F = \frac{E}{Q_2} = K\frac{Q_1}{r^2} = K\frac{Q}{r^2} \qquad (13)$$

The expression of the law of gravity is known as

$$F = G\frac{m_1 \bullet m_2}{r^2} \qquad (14)$$

In the formula, $m_1$ and $m_2$ represent the mass of two objects, $r$ is the distance between the centers of mass of two objects, and G is the constant of universal gravitation. From the formula (14), the expression of the gravitational field intensity P of the mass of the object is

$$P = \frac{F}{m_2} = G\frac{m_1}{r^2} = G\frac{m}{r^2} \qquad (15)$$

It can be seen from comparison that the expression of the force (12) is completely similar to (14), and the expressions of the field intensity (13) and (15) are also completely similar. This means that Coulomb's law is consistent with the law of universal gravitation, and the distribution law of the electric field is consistent with the distribution law of the gravitational field.

It has been proved above that the magnetic field is not a real substance that exists independently. The magnetic field is essentially electric field contracting in motion. That is, the magnetic field still belongs to the electric field. It is just a physical quantity that expresses the motion state of the electric field. The so-called electromagnetic field essentially means the electric field and its motion state. Relating to the gravitational field, the gravitational field is also a real substance. Like all real substance, the gravitational field of motion must contract in

the direction of motion. If we define the gravitational field contracting in motion as the "contraction field", the "contraction field" must have completely consistent characteristics with the magnetic field. When the gravitational field is connected to the contraction field, there must be a gravitational contraction field, that is, the gravitational field and its motion state. Contrast with the electromagnetic field means that the electric field and its motion state must have a gravitational contraction field that is completely similar to the electromagnetic field.

To sum up, the conclusion is that Coulomb's law is similar to the law of universal gravitation, the electric field is similar to the gravitational field, the magnetic field is similar to the contraction field, and the gravitational contraction field is similar to the electromagnetic field. Therefore, it can be said that the electric field and the gravitational field are completely similar, the two are unified, and the establishment of unified field theory is necessarily true.

## CONCLUSION

The unified field theory of electromagnetic field and gravitational field has not been established so far. It is believed that the fundamental reason is that the electromagnetic field theory is not in line with the objective scientific theory. The unscientific electromagnetic field theory leads to the loss of a reliable foundation for the establishment of the unified field theory. Therefore, it is inevitable that the unified field theory cannot be established. This article specifically analyzes the defects of electromagnetic theory, and points out that it is a principle error of electromagnetics to treat the magnetic field as a real substance. All the laws of electromagnetics fail to make the necessary physical explanation, which is the fundamental defect of electromagnetics. To eliminate the defects of electromagnetics, we must first make a scientific definition of the magnetic field. The analysis pointed out that according to electromagnetics, the magnetic field generated by the motion of the same charged particle, observers with different motions will have completely different judgments on the size and direction of the magnetic field, which does not meet the fundamental characteristics that the existence of real substance is independent of the observer. Judging from this, the magnetic field cannot be an independent real substance. According to electromagnetics, there must be a rotating magnetic field around the rotating magnet, which means that the magnetic field must rotate faster than the velocity of light beyond a certain distance from the magnet, which violates the principle of constancy of velocity of light that the velocity of motion of real substance cannot be greater than the velocity of light. This result further proves that the magnetic field is not a real substance. It is also pointed out that due to the incorrect definition of the magnetic field, it is impossible for all the fundamental laws of electromagnetics to make the necessary physical explanations, nor can they clarify the internal causes of these physical laws. In order to make the electromagnetic field theory a scientific theory, we must first make a scientific definition of the magnetic field. Through analysis, it is pointed out that the so-called magnetic field still belongs to the real substance electric field, which is a physical quantity to express the motion state of the electric field and defines the magnetic field as an electric field contracting in motion. This definition serves as a basic principle to deduce and prove Biot-Savart, Lorentz force, electromagnetic induction, displacement current and Ampere loop laws, as well as to clarify the physical processes of the generation of these laws. It is further confirmed that the magnetic field is an electric field contracting in motion by explaining the experimental results of electrostatic field around the permanent magnet which cannot be explained by electromagnetics. It is believed that since the electric field contracting in motion can be defined as a magnetic field, the

gravitational field of motion contraction can naturally also define a "contraction field" similar to the magnetic field. In this way, the contraction field is similar to the magnetic field, the gravitational field is similar to the electric field, and the gravitational field is completely similar to the electromagnetic field. That is, the characteristics of the gravitational field and the electric field are consistent and unified, and the establishment of a unified field theory between the two is an inevitable result.

## References

[1]. 1. Purcel. E.M.Berkeley. Physics Course Science and technology of China Press [1979]

[2]. 2. Yao Kexin. Inferring the Fact that Static Magnetic Field Existx Along With Electrostatic Field and Conducting Experimental Verification in Accordance With the Theory of Relativity. Applied Physics Research Vol.4, No.1. (2012)

[3]. 3. Yao kexin. Defects and Correction Theories of Electromagnetics LANBERT Academic Publishing (2016)

[4]. 4. Yao kexin. Complement of Special relativity and limitation of General Relativity LAMBERT Academic Publishing (2016)

[5]. 5. Yao kexin. Question on Some Principles of electromagnetism. Applied physics Research Vo1.4, No.3 (2012)

[6]. 6. Wu Shoubo, Basics of Theory of Relativity, Shaanxi Science & Technology Press (1987)

[7]. 7. Yao Kexin Explanation of Electromagnetics by Motion of Electric Field. LAMBERT Academic publishing (2014)

[8]. 8. Yao Kexin New principles for the Theory of Relativity LAMBERT Academic Publishing (2016)